Pine

Thermixa 700 Thermostatic Bath/Shower Mixer

Article no.:	5750700	**EAN no.:**	5708516821625
Finish:	Chrome		
Series:	Pine		

Standard features:

Ceramic cartridge
Standard 150mm centres
With wall plates & eccentric unions
1/2" connection for hand shower hose
Water consumption max.23/13 l/min

Product features

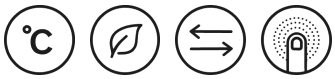

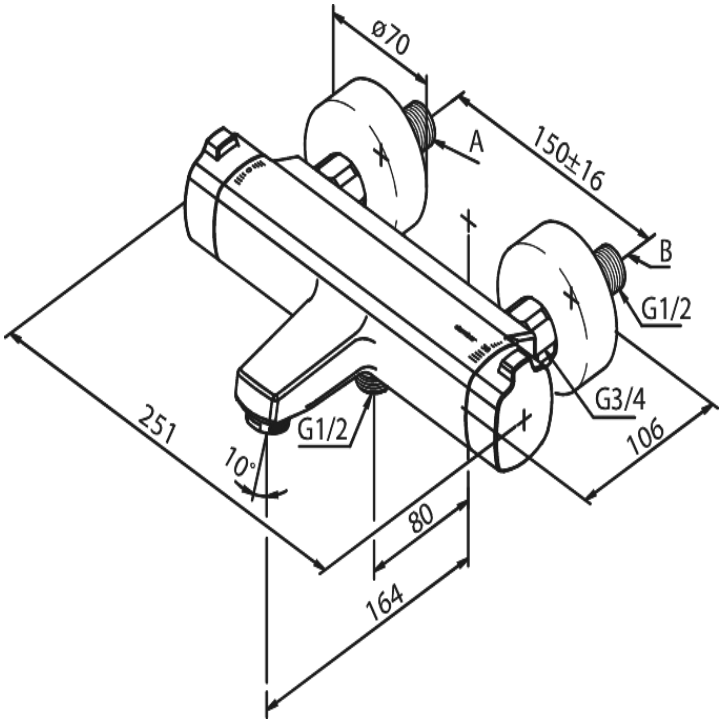

FM Mattsson Mora Group Denmark
Abildager 26 A, 2605 Brøndby, Denmark
Østbirkvej 2, 5240 Odense NØ, Denmark

+45 88 33 00 34 damixa-international@fmm-mora.com

For more information please visit www.damixa.com

damixa